Simulation Visualization and Data Management

Bob Corey
(925) 423-3271
ircorey@llnl.gov

Support for and enhancement of several visualization and postprocessing tools are key components of our project. These tools include the Griz finite element visualization postprocessor, the Mili data management library, and a data file manipulation tool called Xmilics. These tools are used by analysts and engineers across LLNL to interpret data from a variety of simulation codes such as DYNA3D, ParaDyn, NIKE3D and Diablo. We also provide support in the area of data translation tools and processes for performing intra-code calculations.

Griz remains our users' primary tool for visualizing finite element analysis results on 2- and 3-D unstructured grids. Griz provides advanced 3-D visualization techniques such as isocontours and isosurfaces, cutting planes, vector field display, particle traces, and free-particles or free-nodes. Mili is a high-level mesh I/O library for computational analysis and postprocessing on unstructured meshes, providing the primary data path between other LLNL analysis codes and Griz. Mili databases are also viewable with the LLNL VisIt postprocessor. Xmilics is a utility used to combine results from multiple processors that are generated by our large parallel computing platforms.

Project Goals

The project provides ongoing support for LLNL's visualization and postprocessing tools and adds new capabilities to these tools to support evolving, multiprogrammatic requirements.

Relevance to LLNL Mission

These postprocessing tools provide important user interfaces to our simulation capabilities and are critical elements in our tool suite. Without such tools analysts would be severely limited in their ability to interpret the vast amounts of data generated by simulation and to synthesize key results.

FY2009 Accomplishments and Results

User support continues to be a high priority goal. We are currently supporting 30 to 40 active users on a variety of platforms across LLNL and some off-site users including LANL and the Naval Surface Warfare Center, Indian Head. This year we saw a high level of usage and special requests from users supporting W Program, NIF, and Global Security; *e.g.*, Griz and Mili were recently used in LIFE calculations (Fig. 1).

We added a variety of new visualization features to Griz, with the most significant being: 1) enhancements to support strain rotation calculations for shell elements; 2) enhanced support for

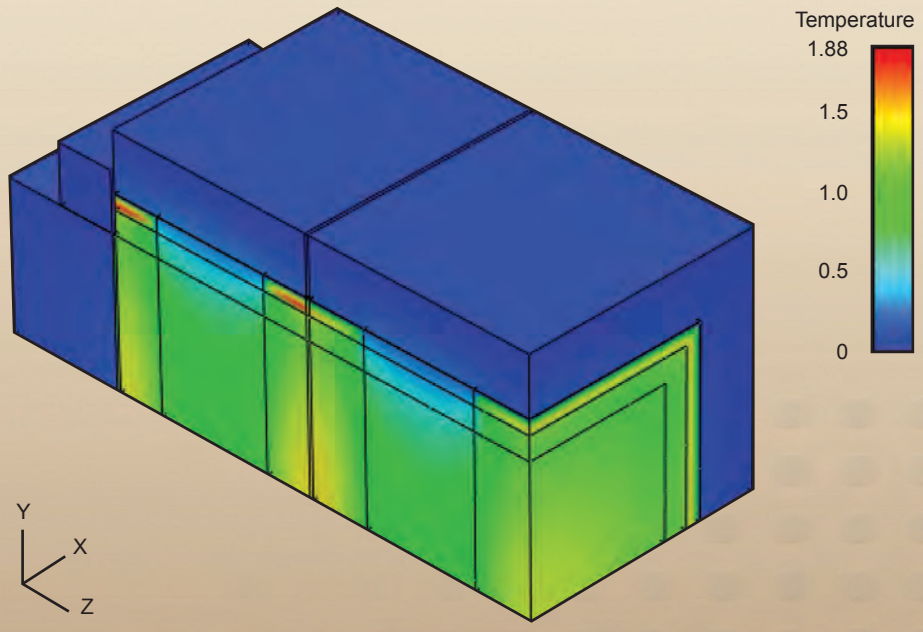

Figure 1. Griz rendering of a thermal model for a high-repetition rate laser that could be used in the LIFE project for lifetime testing of optics.

running Griz from Windows platforms; 3) improvements and features to support "meshless" techniques; and 4) a new form of cut-plane to permit analysts to assess results within parts (Fig. 2).

Last year we began an effort to create a Griz-like API that interfaces to LLNL's popular VisIt parallel visualization tool. We are now working on a GUI using PyQt to function as a familiar interface to the VisIt rendering engine (Fig. 3). This *GrizIt* will give our analysts the capability to visualize very large models with VisIt, while using a more productive command structure.

We continued to make progress in migrating Mili to a modern file structure, namely Silo/HDF. The architecture is hierarchical with a separation between the Silo and Mili layers.

We are applying modern software quality engineering tools to make assessments of Griz and Mili for potential defects. We also created a new Mili Database Reader Utility that will serve as the backbone of an end-to-end regression testing process that represents the workflow most common to our analysts.

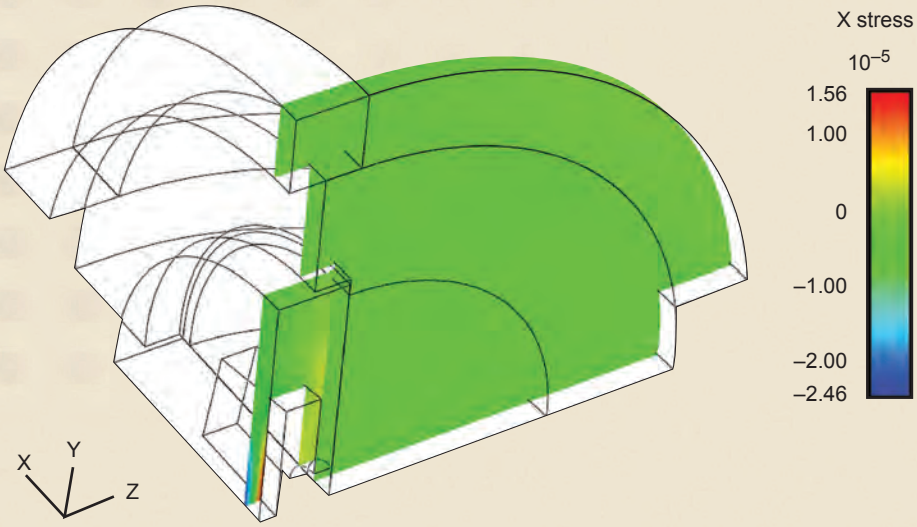

Figure 2. Example of the Griz cut-plane function applied to a ParaDyn Model.

FY2010 Proposed Work

We will continue to provide support for our user base. Efforts targeted for next year include: 1) completing a new version of the Xmilics combiner tool with support for particle methods; 2) providing Griz enhancements as part of the ParaDyn Suite 10.1 release; 3) delivering version 1.0 of GrizIt for testing by analysts; and 4) delivering end-to-end regression testing for code suites including Griz, Mili, and Xmilics.

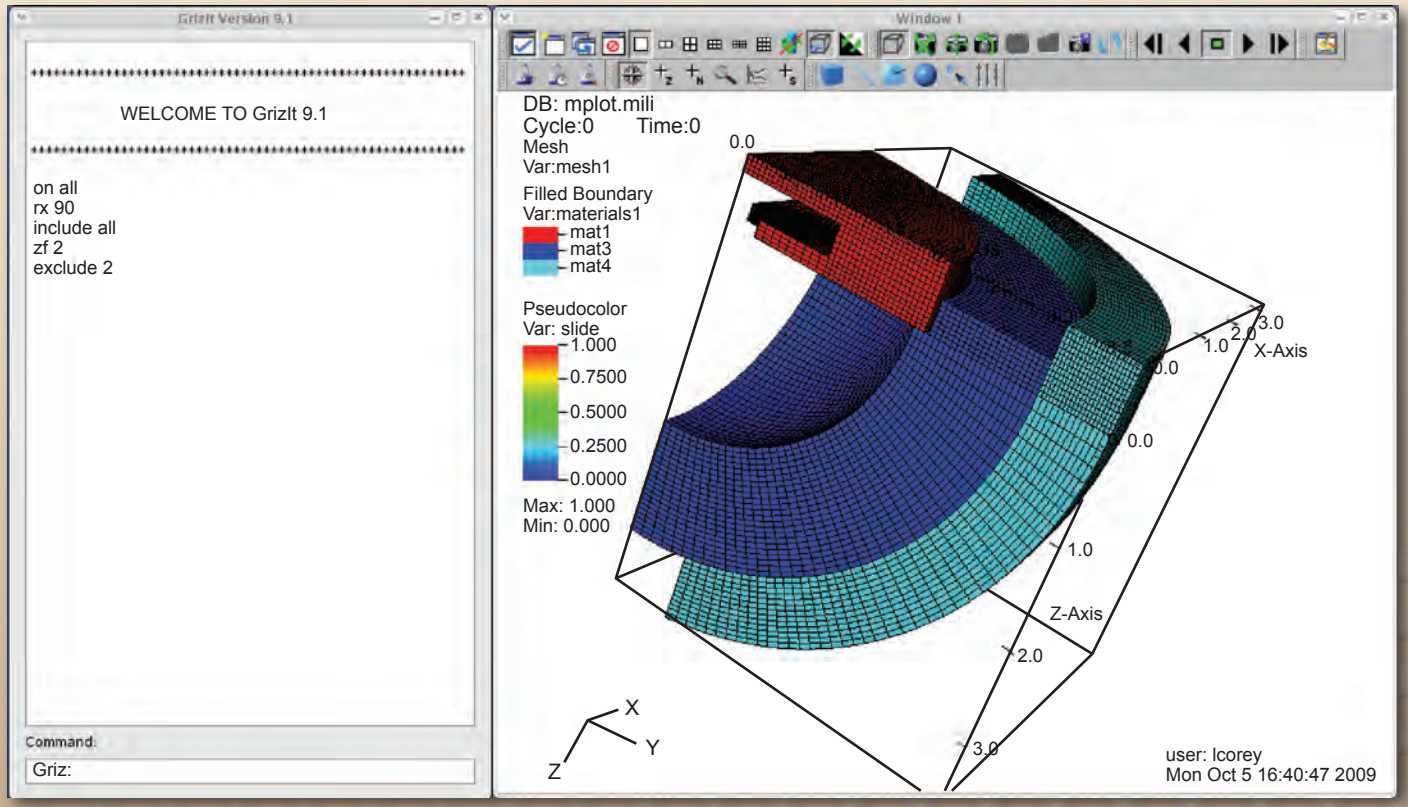

Figure 3. Example of prototype GrizIt command interface using VisIt parallel rendering engine.